MCB3000A - Preliminary

29.5-30.5GHz mmWave ClearPlex Bandpass Filter

Features

- High-Q Low-Loss with High Rejection
- Support for narrowband subsets of 5G NR FR2 NR bands

Applications

- mmWave carrier-grade Infrastructure applications

Part Dimensions: EST 12.5 × 2.5 × 1.3 mm • <1.0 g

Description

Surface mount bandpass filter with I/Os that can interface to micro-strip transmission lines on the top-layer of customer PCBs. Superior rejection, insertion loss, reliability, temperature stability as well as both peak and average power handling compared to other mmWave bandpass filter technologies.

Electrical Specifications

Parameter	Frequency (GHz)	Typical at 25°C	Spec. at 25°C	Spec. over -40°C to +85°C
Nominal Impedance	-	50 ohms	-	-
Average Input Power	-	-	-	5.0 Watt max
Peak Input Power	-	-	-	50 Watt max
Input-Output Response				
Passband Insertion Loss (500 MHz avg)	29.50 - 30.50			2.2 dB Goal 3.0 dB Max
Passband Ripple	29.50 - 30.50			0.8 dB Goal 1.2 dB Max
Passband Return Loss	29.50 - 30.50			14 dB Goal 12 dB Min
Attenuation:	< 28.55			40 dB min
	31.50 - 36.00			40 dB min

Note: CTS tests each unit to the critical specifications above. Subsequent audits may deviate due to repeatability among different test systems which shall not exceed these allowances.

Specification Allowance	
Insertion Loss	0.1 dB
Return Loss	1.0 dB
Attenuation	1.0 dB

Mechanical Drawing

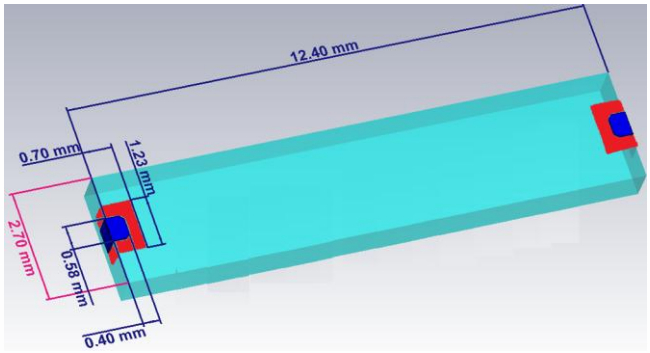

Dim.	Nominal (mm)	Tolerance (±mm or Max)
A	12.40	0.10
B	2.30	0.20
C		
D		
E		
F		
G		
H	1.10	0.20
I		
J		

PCB Layout

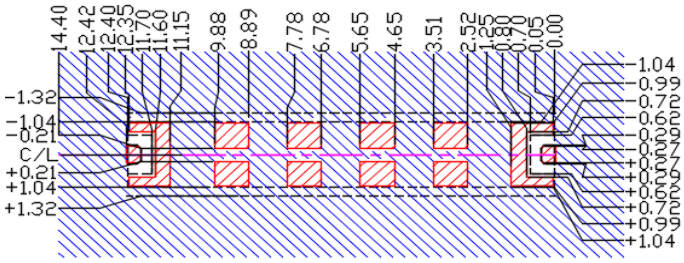

While the layout is the same for the MCB for 28-30.5GHz, the optimal impedance matching will differ.

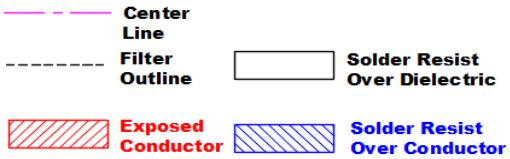

Packaging and Marking

Dimension	Units	Spec.
Reel Diameter	mm	330
Reel Weight	kg	x.x
Reel Quantity	ea.	Xxx

Product Marking
(TBD on the filters)

Customer Feed Direction → → →

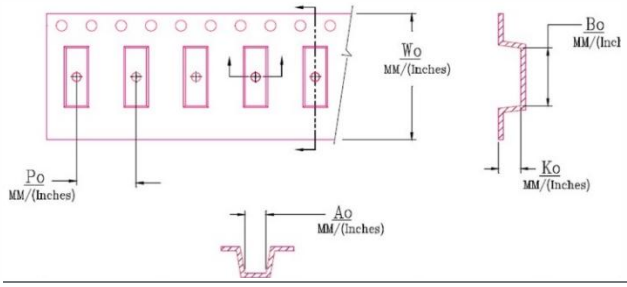

W_o	A_o	B_o	K_o	P_o
1.732 in 44.0 mm	x.xxx in x.xx mm	x.xxx in x.xx mm	x.xxx in x.xx mm	x.xxx in x.xx mm

Electrical Response

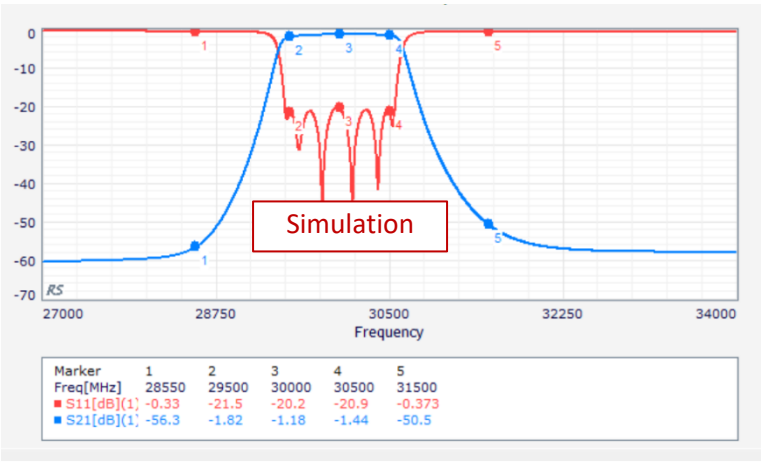

©2025 CTS® Corporation. Information/product(s) subject to change. No warranty that product(s) will meet the stated specifications for customer specific applications or test equipment. Visit www.ctscorp.com for list of applicable patent(s), more information, or to request a quote.